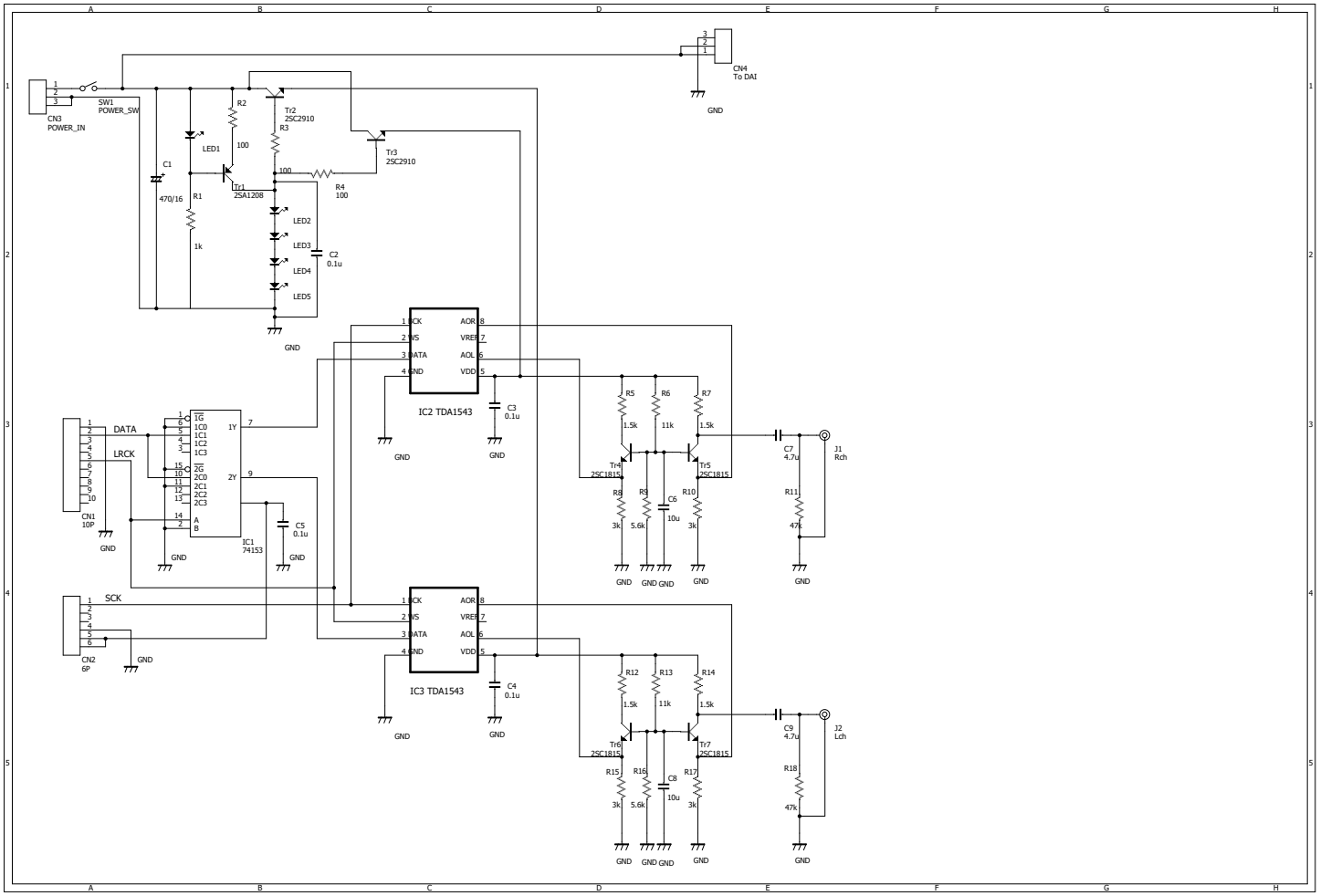
CN3
POWER_IN
SW1
POWER_SW
C1
470/16
R1
1k
LED1
R2
100
Tr1
2SA1208
Tr2
2SC2910
R3
100
R4
100
Tr3
2SC2910
LED2
LED3
LED4
LED5
C2
0.1u
GND
CN4
To DAI
DATA
LRCK
CN1
10P
IC1
74153
C5
0.1u
SCK
CN2
6P
IC2 TDA1543
IC3 TDA1543
C3
0.1u
C4
0.1u
R5
R6
R7
1.5k
11k
Tr4
2SC1815
Tr5
2SC1815
R8
R9
C6
10u
R10
3k
5.6k
C7
4.7u
R11
47k
J1
Rch
R12
R13
R14
Tr6
2SC1815
Tr7
2SC1815
R15
R16
C8
10u
R17
C9
4.7u
R18
J2
Lch