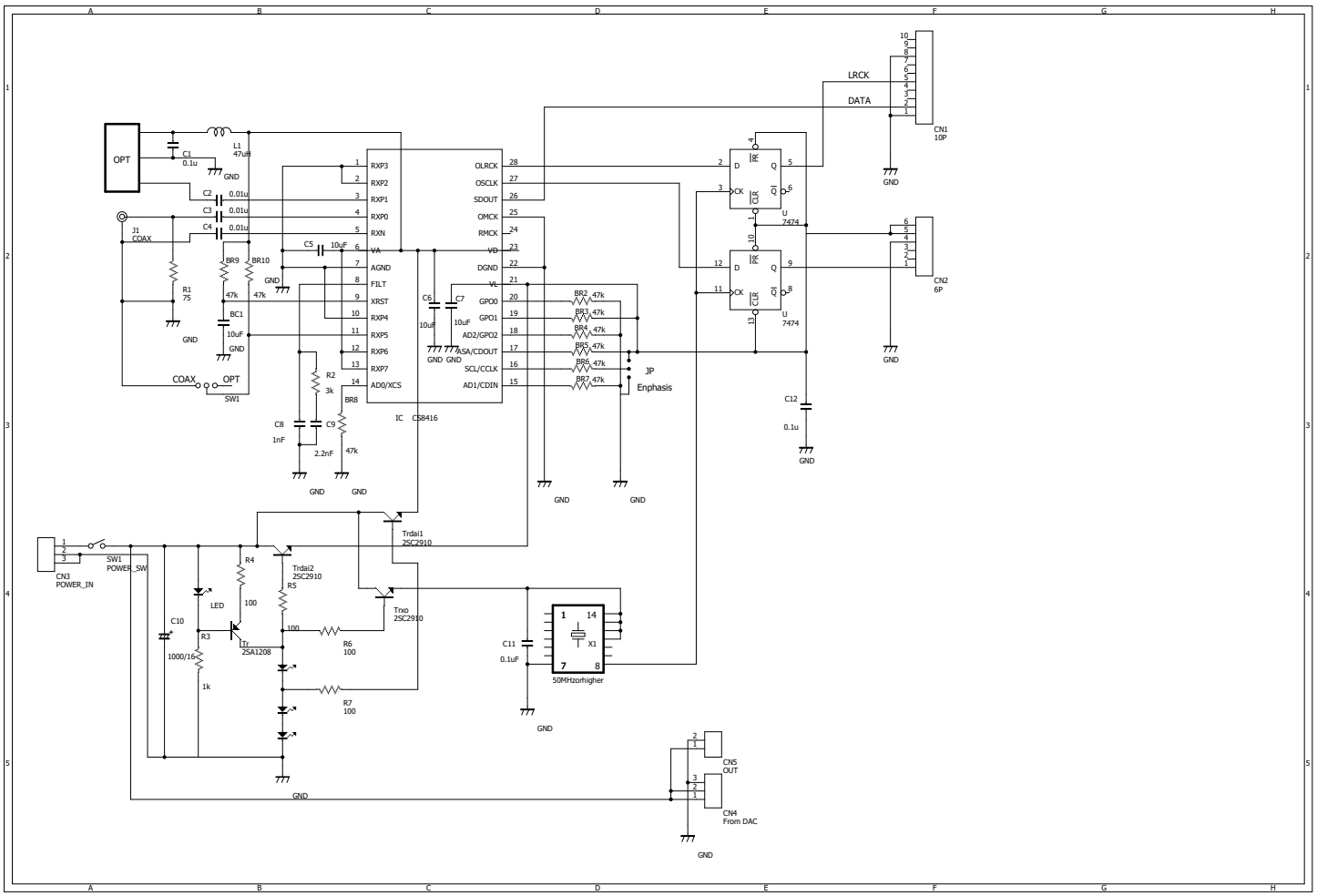
OPT
C1
0.1u
L1
47uH
GND
C2
0.01u
C3
0.01u
C4
0.01u
J1
COAX
R1
75
BR9
BR10
47k
47k
BC1
10uF
COAX
OPT
SW1
C5
10uF
R2
3k
C8
1nF
C9
2.2nF
BR8
47k
RXP3
RXP2
RXP1
RXP0
RXN
VA
AGND
FILT
XRST
RXP4
RXP5
RXP6
RXP7
AD0/XCS
OLRCK
OSCLK
SDOUT
OMCK
RMCK
VD
DGND
VL
GPO0
GPO1
AD2/GPO2
ASA/CDOUT
SCL/CCLK
AD1/CDIN
C6
10uF
C7
10uF
IC CS8416
BR2 47k
BR3 47k
BR4 47k
BR5 47k
BR6 47k
BR7 47k
JP
Enphasis
LRCK
DATA
CN1
10P
CN2
6P
U
7474
C12
0.1u
CN3
POWER_IN
SW1
POWER_SW
Trdai1
2SC2910
Trdai2
2SC2910
Trxo
2SC2910
R4
100
R5
100
R6
100
R7
100
LED
C10
1000/16
R3
1k
Tr
2SA1208
C11
0.1uF
X1
50MHzorhigher
CN5
OUT
CN4
From DAC